**Spare Parts / Ersatzteile / Pièces de recharge / Pezzi di Ricambio / Piezas de requesto / Parte de reposição / Reserveonderdelen / Reservdelar / Reservedeler / Varaosat / Vraosat / Varahlutir / Ανταλλακτικά / Yedek Parçalar / Náhradní díly / Náhradné diely / Nadomestni deli / Резервни части / Запчасти / Części Zapasowe / Piese de schimb / Rendelhető alkatrészek / Запасні частини / Reservni delovi / Резервни делови / Резервни делови / Atsarginių dalių / Tellitavad varuosad / Rezervju daļu**

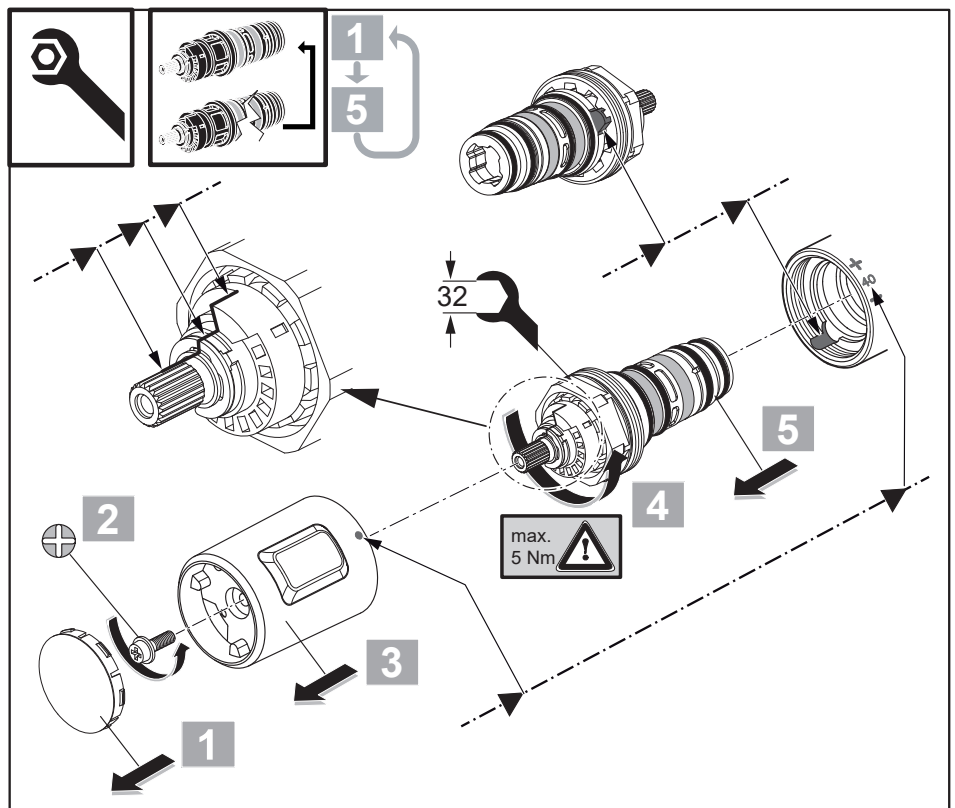


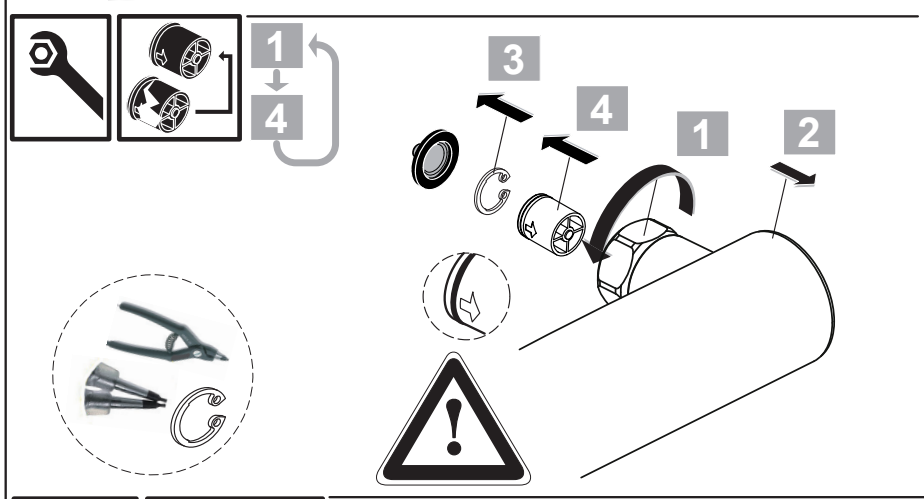


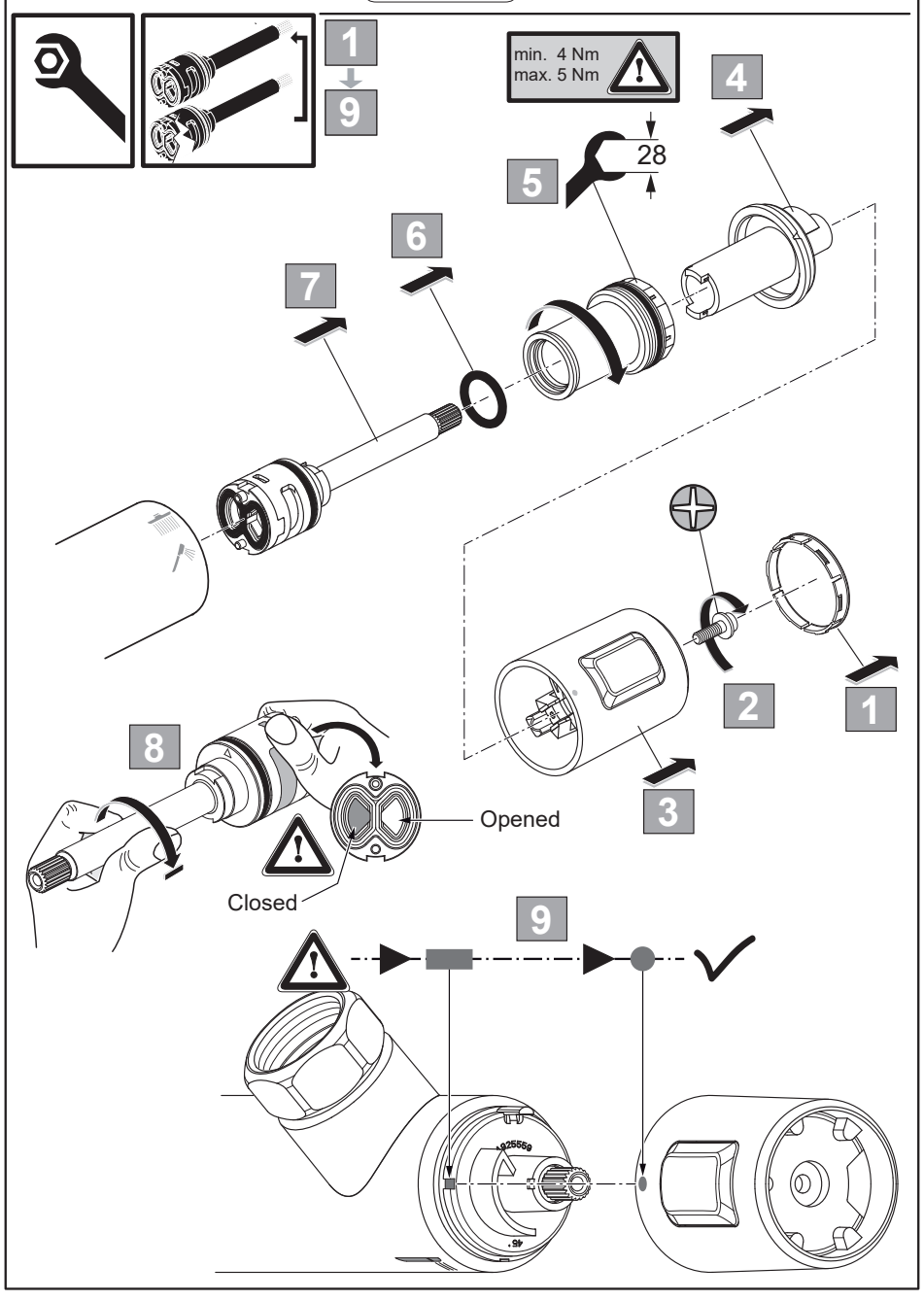


| Pos. | Part No. | |
|---|---|---|
| 1 | A 861 370 AA | |
| 2 | A 861 371 NU | |
| 3 | A 861 375 NU | |
| 4 | A 861 376 NU | |
| 5 | A 861 374 NU | |
| 6 | A 861 372 NU | |
| 7 | A 960 914 AA | |
| 8 | A 961 504 AA | |
| 9 | A 861 385 NU | |
| 10 | BE150 AA | |
| 11 | B 9403 AA | |
| 12 | A 861 377 AA | 1100 mm |
| | A 861 330 AA | 1000 mm |
| 13 | B 960 976 AA | |
| 14 | A 861 331 AA | |
| 15 | A 861 378 AA | |
| 16 | A 861 379 AA | 150 mm |
| | A 861 380 AA | 300 mm |
| 17 | A 861 383 AA | |
| 18 | A 861 508 AA | |

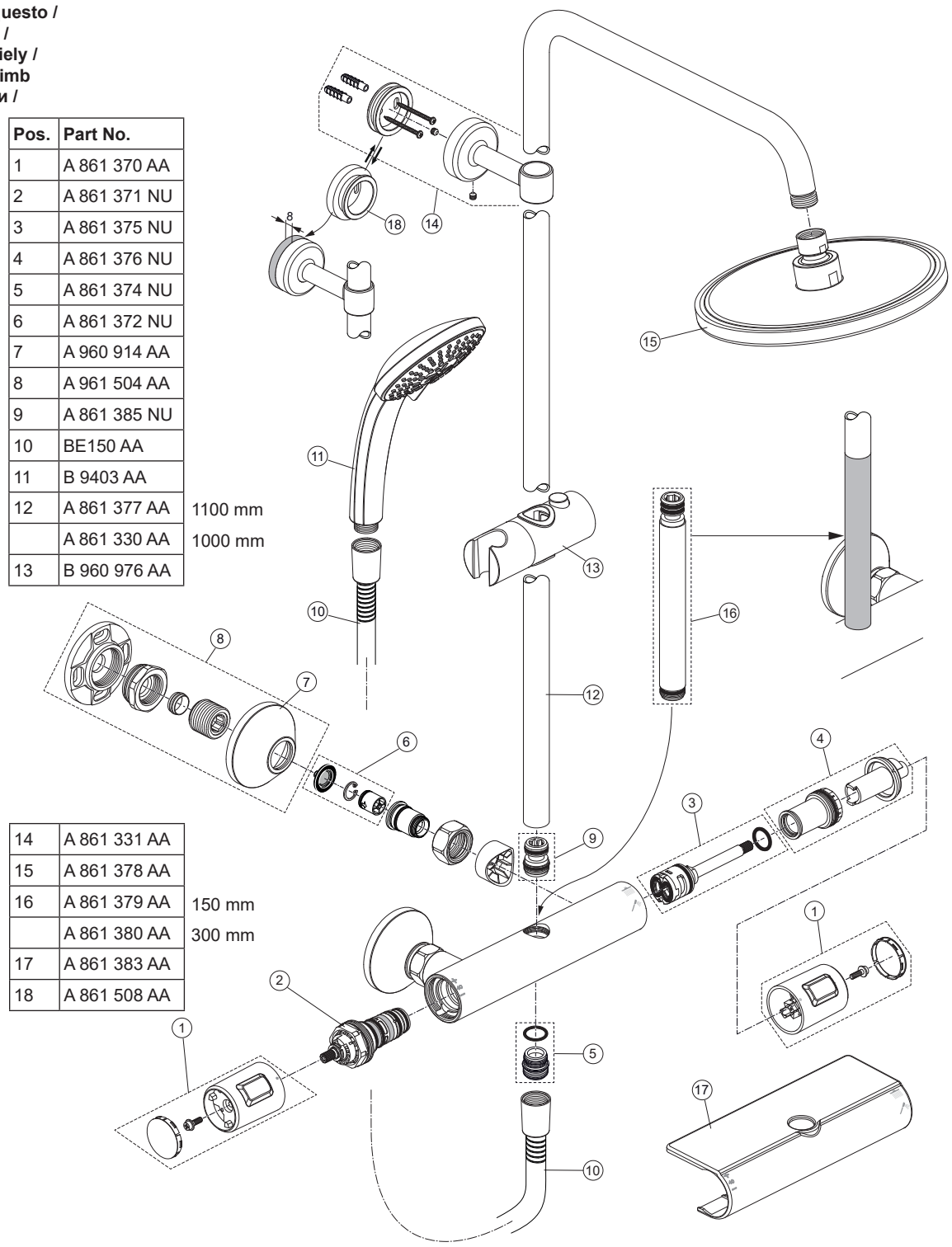


Ideal Standard

# CERATHERM T25

**A 7209 ..**

0322 / A 868 551
Made in Germany

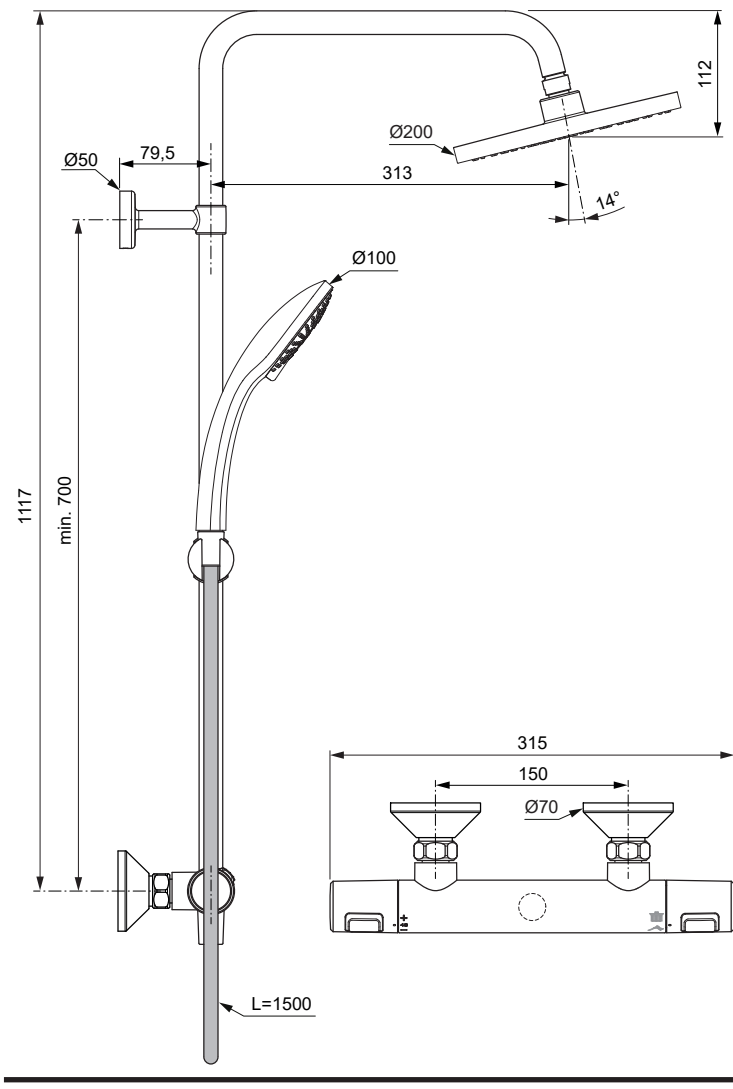



Ideal Standard International NV
Corporate Village - Gent Building
Da Vincilaan 2
1935 Zaventem
Belgium

www.idealstandardinternational.com

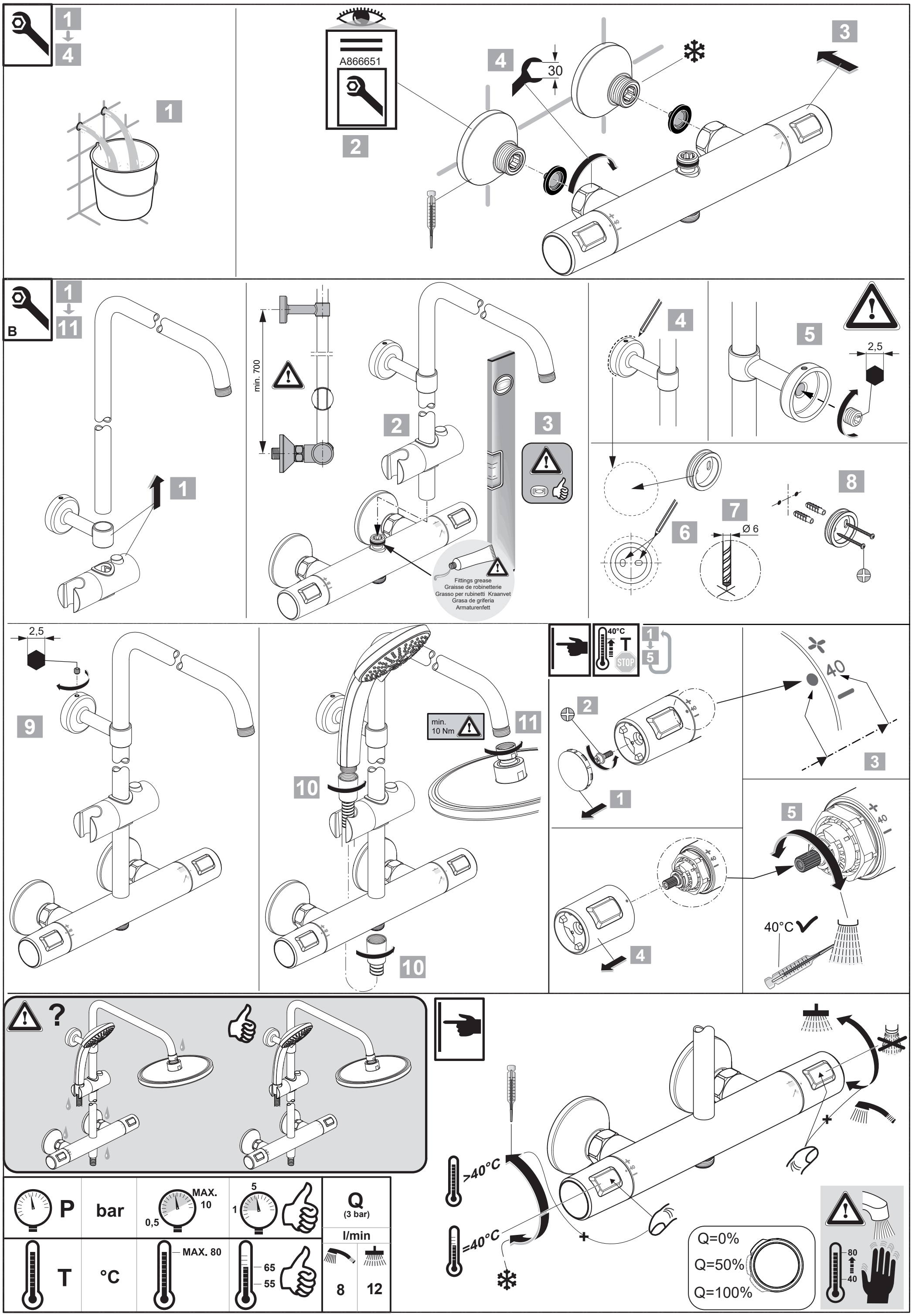
1
4
A866651
2
30
3
B
11
min. 700
Fittings grease
Graisse de robinetterie
Grasso per rubinetti Kraanvet
Grasa de griferia
Armaturenfett
2,5
Ø 6
min.
10 Nm
40°C
STOP
>40°C
=40°C
Q=0%
Q=50%
Q=100%
P
bar
MAX.
10
0,5
5
1
T
°C
MAX. 80
65
55
Q
(3 bar)
l/min
8
12